STAHLWILLE®

Adjustable spanners, imperial

4026

Product no.	**40260110**
GTIN	**4018754299591**
Model	**4026 10**

Label. Adjustable spanner max. size 34mm L.259mm

Properties.

- counter-clockwise adjustment screw
- jaw angled 22.5°
- Chrome Alloy Steel, phosphated
- DIN 3117 / ISO 6787 Form B / ASME B 107.100

Technical drawing.

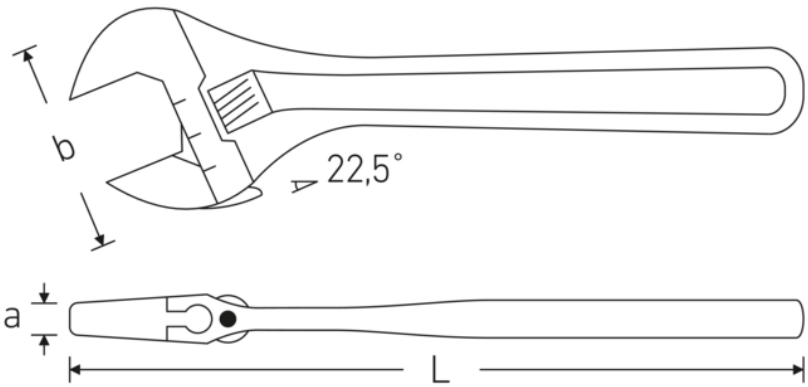

Technical attributes.

Size	10
Max. spanner size	34 mm
Length mm (L)	259 mm
Width mm (b)	74 mm
a	15,8 mm

Logistics data.

Product no.	40260110
GTIN	4018754299591
Weight (g)	490 g
Volume (packaged, dm3)	1.30299 dm3
Packing standard	5

DIN	DIN 3117 / ISO 6787 Form B
Alloy	Chrome Vanadium Steel
Surface	phosphated

WEEE/ElektroG	nicht ear-pflichtig
Customs tariff no.	82041200
Country of origin AWR	SPAIN
Region of origin	Ausländischer Ursprung
Depth mm (IFS)	255
Width mm (IFS)	68
Height mm (IFS)	15
Weight (gross, kg)	2,100
Weight PAP (kg)	0,000
Weight PVC (kg)	0,013
Length (packaged, mm)	257
Width (packaged, mm)	78
Height (packaging, mm)	65

GTIN.

4 018754 299591

STAHLWILLE Eduard Wille GmbH
Lindenallee 27 · 42349 Wuppertal · Germany · Phone: +49 202 4791-0
info@stahlwille.de · www.stahlwille.com
© STAHLWILLE Eduard Wille GmbH, Wuppertal