## Ball joint separator

## 11701

| | |
|---|---|
| Product no. | **71070001** |
| GTIN | **4018754342372** |
| Model | **11701** |

**Label.** Ball joint separator Fork opening 20mm

**Properties.**

- for quick and reliable pressing out of ball joint pins from track rods and stabilisers
- for car and truck ball joints
- 2-way adjustable
- body and lever made from tempered steel
- drop-forged, hardened and tempered

# Benefits.

For quick and reliable pressing out of ball joint pins from track rods, stabilisers etc.

Flexible use thanks to the two-stage lever adjustment option.

The body and the lever are made from high-strength heat-treated steel and are drop-forged.

Makes it easy to disassemble the ball joints of track rods of cars and lorries, and is suitable for the most popular vehicle makes.

Practical handling thanks to the slim fork.

# Product highlights.

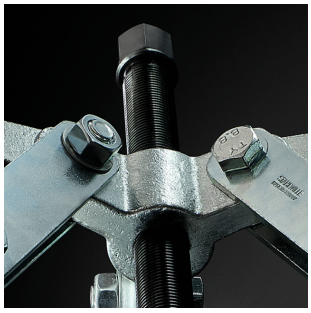

**Reliable sliding properties.**
The high-quality tempered and specially coated pressure spindle has particularly good sliding properties in the thread, is maintenance-free and does not require oiling.

**Flexible use.**
With the two-stage lever adjustment, this ball joint extractor can be conveniently adapted to different joint sizes and types. It also minimises the risk of damage to surrounding parts during use.

**Robust construction.**
The tool is made of high-quality steel and drop-forged, which gives it high stability and resistance to continuous use.

# Technical drawing.

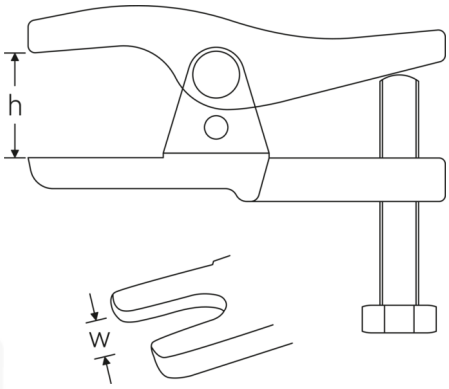


# Technical attributes.

| | |
|---|---|
| **External hex drive (mm)** | 24 mm |
| **Fork opening (w)** | 20 mm |
| **Clear height (h) mm** | 12-50 mm |

# Logistics data.

| | |
|---|---|
| **Product no.** | 71070001 |
| **GTIN** | 4018754342372 |
| **Weight (g)** | 1370 g |

| | |
|---|---|
| **Volume (packaged, dm3)** | 1.6416 dm3 |
| **Packing standard** | 1 |
| **WEEE/ElektroG** | nicht ear-pflichtig |
| **Customs tariff no.** | 82055980 |
| **Country of origin AWR** | GERMANY |
| **Region of origin** | Nordrhein-Westfalen |
| **Depth mm (IFS)** | 155 |
| **Width mm (IFS)** | 110 |
| **Height mm (IFS)** | 50 |
| **Weight (gross, kg)** | 1,260 |
| **Weight PAP (kg)** | 0,010 |
| **Weight PVC (kg)** | 0,000 |
| **Length (packaged, mm)** | 180 |
| **Width (packaged, mm)** | 120 |
| **Height (packaging, mm)** | 76 |

## GTIN.

4 018754 342372

## Images.

**STAHLWILLE Eduard Wille GmbH**
Lindenallee 27 · 42349 Wuppertal · Germany · Phone: +49 202 4791-0
info@stahlwille.de · www.stahlwille.com
© STAHLWILLE Eduard Wille GmbH, Wuppertal