STAHLWILLE®

# Workbench WB 630

## WB 630

| | |
|---|---|
| Product no. | **85010630** |
| GTIN | **4018754359981** |
| Model | **WB 630** |

**Label.**

Workbench WB 630 1 Drawer anthracite, RAL 7016; black, RAL 9005 L.725mm x W.2000mm x H.1281-1586mm

**Properties.**

- ready-to-install design
- tool chest bracket including fasteners material suitable for No. 93 TOP BOX
- lockable drawer (including 2 keys) with full extension runners with bearing cage guide
- with non-slip drawer mat
- large work surface with rubberwood worktop, 30 mm thick, with FSC certification
- integrated perforated back panel for fitting tools and e.g. hooks, spray can holder, paper roll holder, etc.
- with EU 3-way plug adaptor, 2 USB ports, and 2 rubberised cable grommets
- height-adjustable legs (by 305 mm) with levelling feet (M12)
- body RAL 7016, in durable, industrial powder coating
- dimensions: width 2,000 mm, depth 725 mm, adjustable height with back panel: 1,281-1,586 mm, without back panel: 773-1,078 mm
- internal drawer dimensions: 530 x 350 x 74.5 mm
- can be equipped with STAHLWILLE TCS inlays
- available separately: Tool box TOP BOX 93 (81200157) and tool assortment TCS 821/6 (97830255)

# Benefits.

Generous working surface with a width of 2,000 mm with solid rubberwood worktop, FSC certified.

With spacious, lockable drawer with full extension and ball bearing guide and custom-made safety lock for our TOP BOX 93.

The addition of the TOP BOX 93 (81200157) and the 157-pieces tool set TCS 821/6 (97830255) increases the functionality of the workbench.

Variable table height and sturdy levelling feet support efficient and ergonomic working even on uneven floors.

Integrated socket and 2 USB connections with cable outlets allow easy use and charging of power tools and mobile devices.

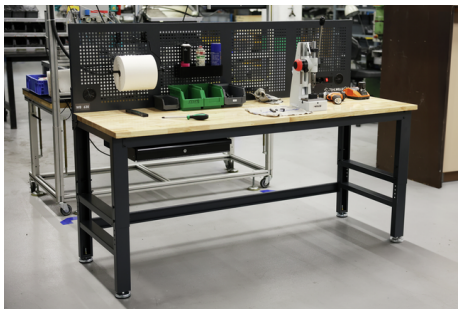

## Product highlights.

**Work surface for the highest demands.**
The solid FSC-certified rubberwood plate is particularly large with a width of 2,000 mm and provides a stable base for demanding daily work.

**Ergonomic working.**
Thanks to adjustable legs, the table height can be flexibly adjusted to individual needs and for optimal ergonomic working in a 25 mm grid height adjustment.

**Modular storage solution.**
With its modular organisation, the workbench offers plenty of space for your tools. This enables our TOP BOX tool box with 4 drawers to be perfectly integrated into the matching holder. A large, lockable drawer on the opposite side provides additional secure storage space.

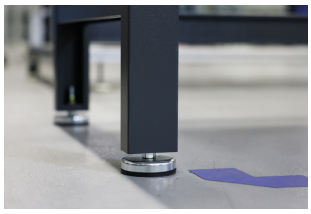

**Optimum stability.**
The levelling feet enable precise and stable alignment of the WB 630 for a secure positioning even on uneven surfaces.

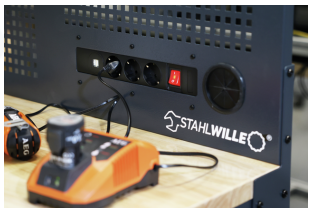


**Direct power supply.**
The workbench is equipped with 2 USB ports for charging electronic devices directly on site. A 3-way plug adapter and rubberised cable grommets on each side enable efficient power supply for cordless power tools.

**Mobile and flexible.**
With the matching wheel set R 630, our workbench can now be used even more flexibly. 4 swivel castors with locking brakes ensure safe and stable working at the desired location. The high-quality rubber wheels (Ø 125 mm) offer smooth running and high driving comfort. Thanks to the height-adjustable design, the ergonomic working height is maintained even in mobile use. A thread guard prevents threads from wrapping around the axis and interfering with movement. Note: Retrofitting reduces the maximum static load capacity of the workbench from 1,000 kg to 600 kg.

## Technologies and features.

**Tool Control System**
The intelligent modular inlay system protects and organises the tools in tool boxes, tool trolleys and workbenches. Two-colour foam inlays make checking the completeness of the tools quick and easy.

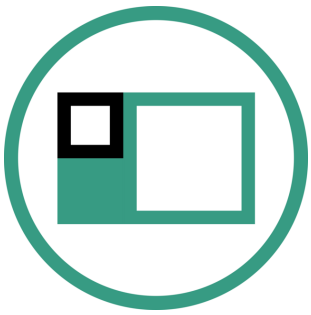

**Modular Inlay System**
This flexible solution for tool storage makes it possible to customise your tool trolleys and workbenches with 1/6, 1/3, 2/3 or 3/3 foam inlays.

## Technical drawing.

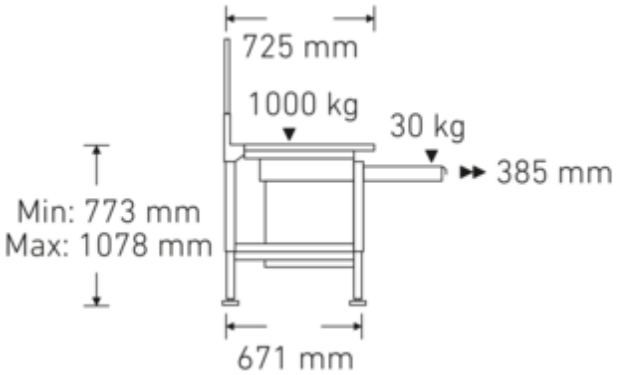


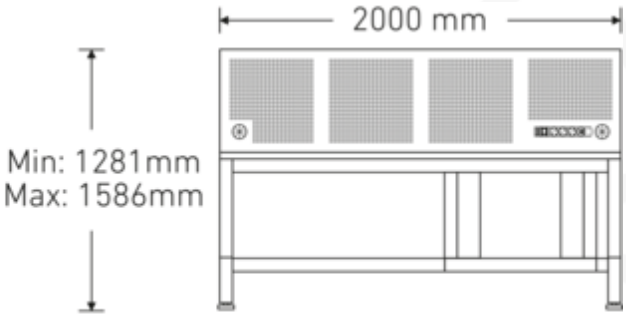


## Technical attributes.

| | |
|---|---|
| **Length mm (L)** | 725 mm |
| **Width mm (b)** | 2000 mm |
| **Number of drawers** | 1 |
| **Load capacity** | 1000 kg |

## Logistics data.

| | |
|---|---|
| **Product no.** | 85010630 |
| **GTIN** | 4018754359981 |
| **Weight (g)** | 102500 g |
| **Volume (packaged, dm3)** | 572.068575 dm3 |

| | |
|---|---|
| **Internal drawer dimensions mm** | 530 x 350 x 74,5 mm |
| **Drawer load capacity** | 30 kg |
| **variable height** | 1281-1586 mm |
| **Colour** | anthracite, RAL 7016; black, RAL 9005 |

| | |
|---|---|
| **Packing standard** | 1 |
| **WEEE/ElektroG** | nicht ear-pflichtig |
| **Customs tariff no.** | 94032080 |
| **Country of origin AWR** | CHINA |
| **Region of origin** | Ausländischer Ursprung |
| **Depth mm (IFS)** | 2103 |
| **Width mm (IFS)** | 837 |
| **Height mm (IFS)** | 325 |
| **Weight (gross, kg)** | 102,600 |
| **Weight PAP (kg)** | 9,000 |
| **Weight PVC (kg)** | 0,000 |
| **Length (packaged, mm)** | 2103 |
| **Width (packaged, mm)** | 837 |
| **Height (packaging, mm)** | 325 |

## GTIN.

4 018754 359981

## Accessories (for).

81490007
Wheel set

89010041
Laptop holder

89010042
Laptop holder adaptor

89010040
Cable holder

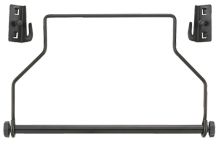

81483004
Paper roll holder

89010052
Waste bin

89010053
Waste bin

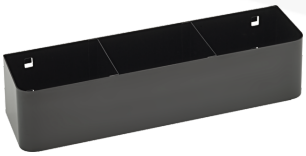

90432719
Spray can holder

90432727
Spray can holder

80380030
Container

89932000
Spanner holder

90432779
Magnetic tray

80310030
Single hook

80310060
Single hook

80310090
Single hook

80320030
Twin hook

80320060
Twin hook

80340040
Twin hook

80340050
Twin hook

80350017
Rectangular lug

80350020
Rectangular lug

80360012
Spring clip

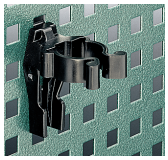

80360018
Spring clip

80360024
Spring clip

81485006
Spring clip

81485012
Spring clip

81200157
Tool chest

## Spare part(s), spare part(s) for.

PRODUCT IMAGE
IN PROGRESS

90433170

# Images.

**STAHLWILLE Eduard Wille GmbH**
Lindenallee 27 · 42349 Wuppertal · Germany · Phone: +49 202 4791-0
info@stahlwille.de · www.stahlwille.com
© STAHLWILLE Eduard Wille GmbH, Wuppertal