# Battery terminal pullers

## 11600

| | |
|---|---|
| Product no. | **71061001** |
| GTIN | **4018754342334** |
| Model | **11600/1** |

**Label.** Battery terminal pullers Clamping w.65mm x Clamping d.50mm

**Properties.**

- double-armed, with self-centring extractor arms
- for removing battery terminals, small ball bearings, belt pulleys etc.
- for extracting in enclosed, difficult to access spaces
- T-handle makes one-handed spindle extraction possible
- When spindle pressure is applied, the extractor arms grip the workpiece to be extracted with automatically increasing force
- Thanks to its compact size and slim hooks, it is particularly suitable for automotive electrics, compressed air repairs and similar application areas

# Benefits.

The pole terminal extractor is used to remove small parts such as battery terminals, small ball bearings and washers.

-

Thanks to the adjustable arms, the pole terminal extractor can be easily and flexibly adapted to the size of the component to be removed.

The practical design is ideal for working in narrow and difficult to access spaces.

Easy on the workpiece thanks to even force distribution.

# Product highlights.

**Adapted access geometry.**
The self-centering puller arms automatically adjust to the shape of the part to be removed. This facilitates handling and ensures an even distribution of the pull-off force.

**Optimum performance in confined spaces.**
The compact design and slim hooks of the terminal puller allow effortless access to tight and hard-to-reach spaces where other tools may not fit.

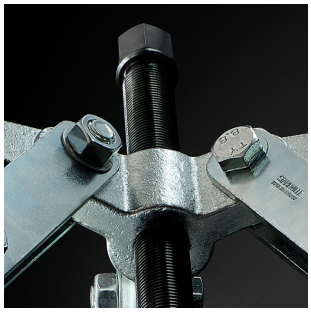

**Reliable sliding properties.**
The high-quality tempered and specially coated pressure spindle has particularly good sliding properties in the thread, is maintenance-free and does not require oiling.

**Gentle pulling.**
Even force distribution on the workpiece ensures gentle removal. This reduces the risk of damage to the terminals, ball bearings, etc.

**Protection against damage.**
The centering tip is freely rotating - to protect the shafts from damage.

## Technical drawing.

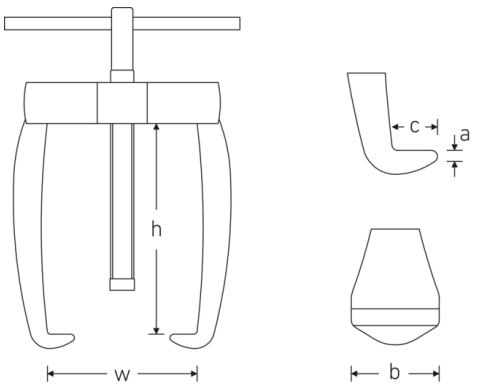


## Technical attributes.

| | |
|---|---|
| **Size** | 1 |
| **Number of hooks** | 2 |
| **max. load** | 1 t |
| **Clamping depth (h) mm** | 50 mm |

## Logistics data.

| | |
|---|---|
| **Product no.** | 71061001 |
| **GTIN** | 4018754342334 |
| **Weight (g)** | 240 g |
| **Volume (packaged, dm3)** | 0.065 dm3 |

| | |
|---|---|
| **Span mm (w)** | 65 mm |
| **Spindle thread size** | M10 x 115 |
| **Hook base width mm (b)** | 12 mm |
| **Hook foot depth mm (c)** | 10 mm |
| **Thickness of hook base tip mm (a)** | 3 mm |

| | |
|---|---|
| **Packing standard** | 1 |
| **WEEE/ElektroG** | nicht ear-pflichtig |
| **Customs tariff no.** | 82055980 |
| **Country of origin AWR** | GERMANY |
| **Region of origin** | Nordrhein-Westfalen |
| **Depth mm (IFS)** | 65 |
| **Width mm (IFS)** | 50 |
| **Height mm (IFS)** | 20 |
| **Weight (gross, kg)** | 0,258 |
| **Weight PAP (kg)** | 0,008 |
| **Weight PVC (kg)** | 0,000 |
| **Length (packaged, mm)** | 65 |
| **Width (packaged, mm)** | 50 |
| **Height (packaging, mm)** | 20 |

## GTIN.

4 018754 342334

## Images.

**STAHLWILLE Eduard Wille GmbH**
Lindenallee 27 · 42349 Wuppertal · Germany · Phone: +49 202 4791-0
info@stahlwille.de · www.stahlwille.com
© STAHLWILLE Eduard Wille GmbH, Wuppertal