Tool trolleys 98 PRO

98/8 PRO

Product no.	**81200174**
GTIN	**4018754334544**
Model	**TTS 98/8 R PRO**

Label.

Tool trolley 98/8 PRO 8 Drawer 651 x 1001 x 1020 mm red, RAL 3020; black, RAL 9005

Properties.

- three-stage safety concept:
  - central locking with a lateral cylinder lock and hinged key
  - individual locks prevent inadvertent opening during transit
  - tilt protection - multiple drawers cannot be pulled out at the same time
- 100 % increased drawer volume compared to the 93 and TTS 95 PRO
- stainless steel with reinforced handle
- all-round collision protection with impact damping
- tightly welded, resilient work and storage surface; end panel made of stainless steel
- oil and acid-resistant wheels (Ø 125 mm) with bearings protected from the ingress of dirt and fibres, and 2 parking brakes
- paper roller and spray can holder included
- 8 easily removable drawers, black, full-extension runners with bearing cage guide
- two-sided perforated panel for hooks no. 8031-8041, e.g. for larger tools
- can be fitted with STAHLWILLE standard and TCS inlays

Benefits.

Maximum storage area thanks to width of 100 cm, 65 cm deep and drawer full extension.

Optionally, 7 or 8 easily removable drawers.

High static load-bearing capacity up to 1,400 kg.

High quality, durable materials such as tightly welded stainless steel top tray.

Oil and acid-resistant smooth-running castors (Ø 125 mm) with thread protection and two locking brakes.

Product highlights.

Simply more space.
With a width of more than 100 cm, a depth of 65 cm and a drawer full extension, our biggest tool trolley provides maximum storage space and room for your tools. In comparison to the 93 and 95 PRO models, the TTS 98 PRO provides 100 % more drawer volume with premium quality.

Takes on anything.
High-quality materials such as the tightly welded stainless steel tray provide the durability that is typical of STAHLWILLE, and prevent liquids from penetrating the interior of the trolley. The working area of 740 x 570 mm is particularly suitable for working on large components. Thanks to its robust design, the 98 PRO achieves a static load-bearing capacity of 1,400 kg. The drawers can be loaded with up to 40 kg thanks to stiffening, and the bottom drawer can even be loaded with up to 60 kg.

Secure down to the last detail.
The drawers are centrally locked using a cylinder lock with a folding key. The single-drawer lock prevents unintentional opening while driving. In addition, only one drawer can always be opened at a time, ensuring reliable tipping protection.

Everything in its place.
The TTS 98 PRO can be supplemented with the STAHLWILLE Tool Control System. The TCS inlays protect the tools and keep things in order. The signal colour makes it immediately clear, if a tool is missing. The 3D cutouts make quick and convenient removal possible.

Full configuration as standard.
Whether paper roll and spray can holders, all-round impact protection with shock absorption, perforations on both sides for attaching accessories, locking brakes or oil and acid-resistant smooth-running castors (Ø 125 mm) with thread protection. Our tool trolley comes with many features as standard.

Technologies and features.

Tool Control System
The intelligent modular inlay system protects and organises the tools in tool boxes, tool trolleys and workbenches. Two-colour foam inlays make checking the completeness of the tools quick and easy.

Technical drawing.

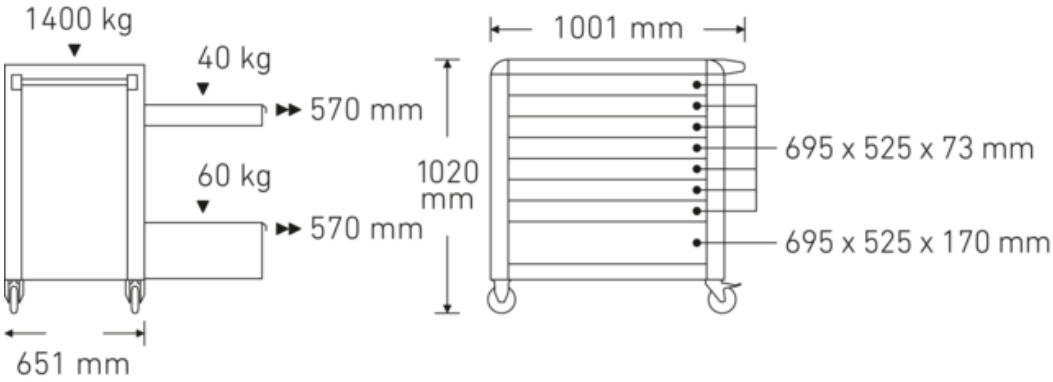

Technical attributes.

Model No.	98/8 R PRO
Verschlussart	Zentralverriegelung
Length mm (L)	651 mm
Width mm (b)	1001 mm
Height mm (h)	1020 mm
Number of drawers	8
Load capacity	1400 kg
Internal drawer dimensions mm	695 x 525 x 73 mm (7x) 695 x 525 x 170 mm (1x)
Drawer load capacity	40 kg 60 kg
Colour	red, RAL 3020; black, RAL 9005
Colour abbreviation	RAL 3020; RAL 9005

Logistics data.

Product no.	81200174
GTIN	4018754334544
Weight (g)	114000 g
Volume (packaged, dm3)	680.166375 dm3
Packing standard	1
WEEE/ElektroG	nicht ear-pflichtig
Customs tariff no.	94032080
Country of origin AWR	CHINA
Region of origin	Ausländischer Ursprung
Depth mm (IFS)	890
Width mm (IFS)	650
Height mm (IFS)	865
Weight (gross, kg)	123,500
Weight PAP (kg)	9,500
Weight PVC (kg)	0,000
Length (packaged, mm)	987
Width (packaged, mm)	745

Height (packaging, mm)	925

GTIN.

4 018754 334544

Accessories (for).

80310090
Single hook

90432727
Spray can holder

80320060
Twin hook

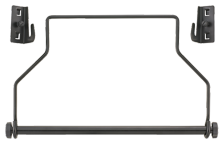

81483004
Paper roll holder

80340040
Twin hook

89010040
Cable holder

80340050
Twin hook

83812070
Empty tray for small components

80350017
Rectangular lug

80350020
Rectangular lug

81484001
Drawer divider

80360012
Spring clip

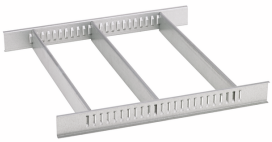

81484002
Drawer divider

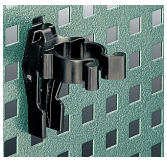

80360018
Spring clip

81485006
Spring clip

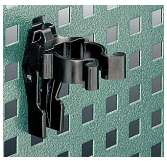

80360024
Spring clip

81485012
Spring clip

80380030
Container

80310030
Single hook

80310060
Single hook

80320030
Twin hook

89011053
Waste bin

89010042
Laptop holder adaptor

Spare part(s), spare part(s) for.

90432718
Lock, mechanical

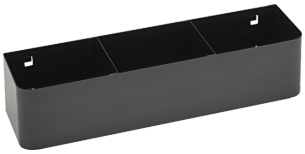

90432719
Spray can holder

89480003
Wheel set

81490005
Wheel set

Images.

STAHLWILLE Eduard Wille GmbH
Lindenallee 27 · 42349 Wuppertal · Germany · Phone: +49 202 4791-0
info@stahlwille.de · www.stahlwille.com
© STAHLWILLE Eduard Wille GmbH, Wuppertal