STAHLWILLE®

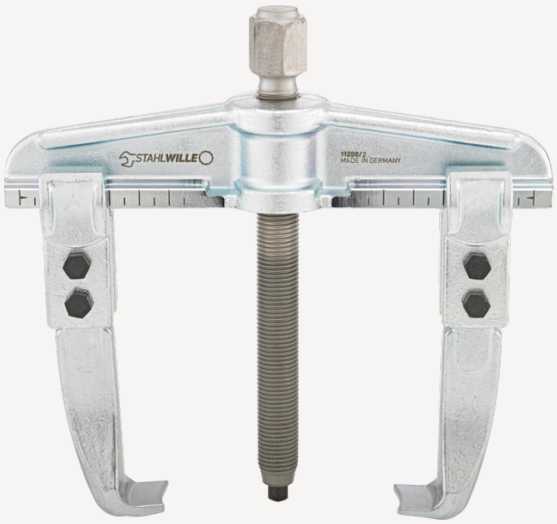

Pullers, two-armed

11200

Product no.	**71020002**
GTIN	**4018754341795**
Model	**11200/2**

Label. Puller 2armed 130x100mm

Properties.

- two-armed
- with sliding, constantly parallel extractor hooks
- for gears, ball bearings, pulleys and similar parts from a shaft or axle
- for ball bearings, ball bearing outer races and sockets out of drilled holes
- reversible arms for use as external and internal pullers
- adjustment scale for uniform adjustment of the extractor hooks
- nitrided spindle, no lubrication required, maintenance-free
- sturdy design, zinc plated

Benefits.

For quick and reliable removal of gears, ball bearings, fan belts and for extracting the outer rings of ball bearings and bushings from drilled holes.

The adjustment scale on the beam makes precise and uniform adjustment of the puller hooks possible.

The nitrided surface of the spindle allows it to move easily so it does not require additional lubrication.

The adjustable puller arms make for universal use as both an external or internal puller possible.

Outstanding flexural strength thanks to legs with precisley manufactured profiles and smooth, milled guides.

Product highlights.

Flexible repositioning function.
The bearing puller has 2 or 3 sliding extractor hooks that are always parallel. These can be quickly and easily repositioned for flexible use as external and internal pullers.

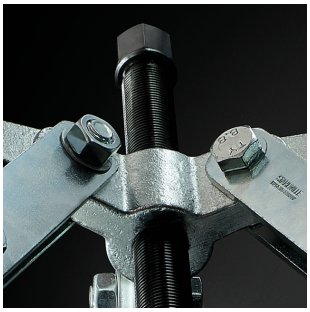

Reliable sliding properties.
The high-quality tempered and specially coated pressure spindle has particularly good sliding properties in the thread, is maintenance-free and does not require oiling.

Adapted access geometry.
Heavy-duty puller hooks made of oil-hardened Chrome Alloy Steel with special access geometry for tight spaces. Custom radii for shafts and axes.

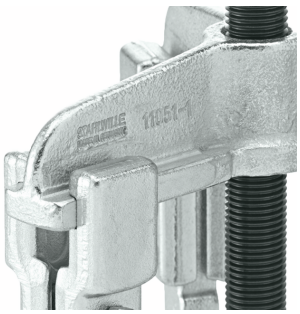

Enormous bending stiffness.
High bending rigidity thanks to cross members with precisely calculated profile ribs and milled, smooth guideways.

Protection against damage.
The centering tip is freely rotating - to protect the shafts from damage.

Technical drawing.

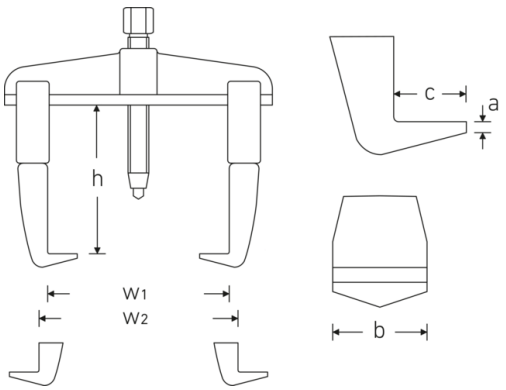

Technical attributes.

Size	2
External hex drive (mm)	17 mm
Number of hooks	2
max. load	3 t

Logistics data.

Product no.	71020002
GTIN	4018754341795
Weight (g)	1136 g
Volume (packaged, dm3)	5.46 dm3

Clamping depth (h) mm	100 mm
Span max. external mm (w1)	130 mm
Span max. inner mm (w2)	180 mm
Span min. inner mm	70 mm
Spindle thread size	M14 x 1,5 x 140
Hook base width mm (b)	22 mm
Hook foot depth mm (c)	12 mm
Thickness of hook base tip mm (a)	3 mm

Packing standard	1
WEEE/ElektroG	nicht ear-pflichtig
Customs tariff no.	82055980
Country of origin AWR	GERMANY
Region of origin	Nordrhein-Westfalen
Depth mm (IFS)	170
Width mm (IFS)	155
Height mm (IFS)	36
Weight (gross, kg)	1,248
Weight PAP (kg)	0,118
Weight PVC (kg)	0,000
Length (packaged, mm)	195
Width (packaged, mm)	175
Height (packaging, mm)	160

GTIN.

4 018754 341795

4 018754 341795

Images.

© STAHLWILLE Eduard Wille GmbH, Wuppertal