Torque testers

SmartCheck USB

Product no.	**96521214**
GTIN	**4018754362820**
Model	**SmartCheck 135 USB**

Label. Torque tester Measuring r.5-135N·m Internal square drive 3/8"

Properties.

- for testing indicating and clicking type torque wrenches
- with interchangeable square drive adaptors for square drives (from 3/8" to 1/4" with SmartCheck 135 USB; from 3/4" to 1/2" for SmartCheck 400 USB)
- large LCD for optimum readability
- the display, the display holder, and the base can be rotated 180°
- compact design
- display and keypad are splash-proof; the housing is made of impact-resistant plastic
- simple installation thanks to pre-drilled holes in the mounting bracket
- horizontal or vertical orientation
- for controlled clockwise and counter-clockwise torque testing
- 3 operating modes: running display of the applied torque (Track), display of the torque on click point detection (First-Peak), peak value display (Peak-Hold)
- customised input of target torques and tolerances for evaluating the measured value
- with integrated visual and acoustic overload protection
- 3 measuring units (N·m, ft·lb, in·lb)
- micro USB interface for data export and for power supply (if required)
- data storage for up to 200 data records, including date and time stamp
- CheckMaster documentation software for transferring values and creating test certificates is available free of charge at www.stahlwille.com
- operation via included power supply, batteries or rechargeable batteries (4 x AAA or 1 x 9 V block, adaptor included)
- with factory certificate
- delivered in a sturdy plastic box
- **accuracy ± 1%**

Benefits.

Electronic testing device for checking and adjusting indicating and clicking type torque wrenches.

Measurement in the large torque range from 1 to 1,500 N·m.

The large LCD can be rotated 180° and is easy to read from any position.

Simple, quick and reliable testing of torque wrenches to ensure quality in production.

Simple documentation of the measured values on the PC via USB interface.

Product highlights.

Flexible mounting.
Whether mounted horizontally or vertically, the well-designed mounting points, compact design and rotatable display allow flexible positioning anywhere in the workshop.

Optimum viewing angle.
The compact testing device can be adjusted to the optimum individual viewing angle. The display can be viewed from practically anywhere, as not only the large LCD, but also the display holder and the base body can be rotated by 180°.

Communication and power supply via USB.
SmartCheck is equipped with a convenient micro-USB interface that allows stored test values to be read out and simplifies their transfer to external systems. The USB port also serves as an optional power supply for the device.

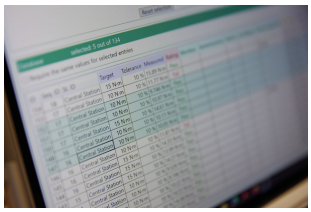

Comprehensive documentation.
The SmartCheck testing device can be easily configured with CheckMaster software, allowing direct evaluation of measurement results. This means that all data can be read out and saved on the PC for better monitoring and optimisation of the work processes.

Plug and Work.
Our SmartCheck is intuitive and ready to use right away. It is space-saving and can be mounted flexibly with its versatile mounting options. The device is powered by either a mains power supply or batteries and can therefore be easily positioned at any workstation, even if no power outlet is available.

Technologies and features.

DIN EN
ISO 6789-2

DIN EN ISO 6789-2
Our torque wrenches and torque screwdrivers are professionally calibrated in accordance with DIN EN ISO 6789-2 and delivered with a corresponding calibration certificate. We also calibrate angle-controlled torque wrenches in accordance with VDI 2648-2. This ensures the accuracy and traceability of our tools.

Technical drawing.

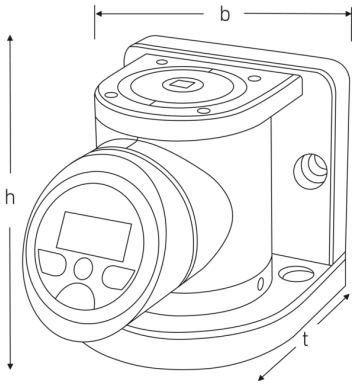

Technical attributes.

Anzeigeabweichung	± 1 %
Model No.	SmartCheck 135 USB
Measuring range N·m	5-135 N·m
Measuring range ft-lb	3,7-99,6 ft·lb
Measuring range in-lb	44,3-1195 in·lb
MA N·m	5 N·m

Logistics data.

Product no.	96521214
GTIN	4018754362820
Weight (g)	5310 g
Volume (packaged, dm3)	17.7785 dm3
Packing standard	1
WEEE/ElektroG	Kleingeräte B2C
Customs tariff no.	90318080

Nominal value N·m	135 N·m
Width mm (b)	120 mm
Height mm (h)	124 mm
Internal square [inch]	3/8 "
t	167 mm
Number of digits	6
Weight with box	6656 g

Country of origin AWR	GERMANY
Region of origin	Nordrhein-Westfalen
Depth mm (IFS)	370
Width mm (IFS)	155
Height mm (IFS)	310
Weight (gross, kg)	7,210
Weight PAP (kg)	0,150
Weight PVC (kg)	0,000
Length (packaged, mm)	370
Width (packaged, mm)	155
Height (packaging, mm)	310

Parts list.

11030010
Square drive adaptor

51110057
USB cable

52110063
USB power supply

81500004
Plastic box, empty

GTIN.

4 018754 362820

Images.

STAHLWILLE Eduard Wille GmbH
Lindenallee 27 · 42349 Wuppertal · Germany · Phone: +49 202 4791-0
info@stahlwille.de · www.stahlwille.com
© STAHLWILLE Eduard Wille GmbH, Wuppertal