Tool trolleys 95 PRO

95/7 PRO

Product no.	**81200163**
GTIN	**4018754334667**
Model	**TTS 95/7 A PRO**

Label.

Tool trolley 95/7 PRO 7 Drawer 496 x 827 x 1020 mm anthracite, RAL 7016; black, RAL 9005

Properties.

- three-stage safety concept:
  - central locking with a lateral cylinder lock and hinged key
  - individual locks prevent inadvertent opening during transit
  - tilt protection - multiple drawers cannot be pulled out at the same time
- stainless steel with reinforced handle
- all-round collision protection with impact damping
- tightly welded, resilient work and storage surface; end panel made of stainless steel
- oil and acid-resistant ball-bearing smooth-running wheels (Ø 125 mm) with thread guards to protect the bearings from dirt and threads, with 2 locking brakes
- paper roll holder and spray can holder included
- 7 easily removable drawers, black, full-extension runners with bearing cage guide
- two-sided perforated panel for hooks no. 8031-8041, e.g. for larger tools
- can be fitted with STAHLWILLE standard and TCS inlays

Benefits.

7 easily removable drawers with practical full extension; the ball cage guide ensures smooth operation.

Oil and acid-resistant smooth-running castors (Ø 125 mm) with thread protection protect the bearings from dirt and threads, with 2 locking brakes.

The all-round bumper with impact damping effectively protects the workshop trolley and its surroundings from damage in the event of collisions.

The spacious storage area is fully welded and reliably sealed to protect the interior of the workshop.

Central locking via cylinder lock with a foldable key; the tilt protection prevents multiple drawers from being pulled out simultaneously.

Product highlights.

Takes on anything.
High-quality materials such as the tightly welded stainless steel tray with a scratch-resistant honeycomb structure ensure the durability typical of STAHLWILLE and prevent liquids from penetrating into the interior of the trolley. The work surface of 827 x 496 mm is particularly suitable for working on large components. Thanks to its robust construction, the 95 PRO has a static load capacity of 750 kg. Thanks to reinforcements, the drawers can be loaded with 30 kg and the bottom drawer with up to 45 kg.

Secure down to the last detail.
The drawers are centrally locked using a cylinder lock with a folding key. The single-drawer lock prevents unintentional opening while driving. In addition, only one drawer can always be opened at a time, ensuring reliable tipping protection.

Full configuration as standard.
Whether paper roll and spray can holders, all-round impact protection with shock absorption, perforations on both sides for attaching accessories, locking brakes or oil and acid-resistant smooth-running castors (Ø 125 mm) with thread protection. Our tool trolley comes with many features as standard.

Optimally organized.
All drawers can be pulled out 100%. In combination with the STAHLWILLE standard and TCS inserts or the variable drawer dividers, this ensures optimum overview and convenient tool removal at all times.

Technologies and features.

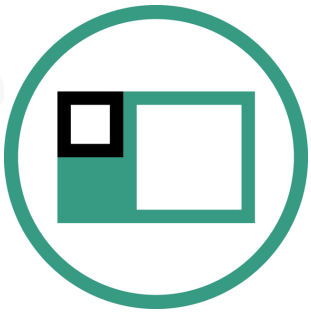

Modular Inlay System
This flexible solution for tool storage makes it possible to customise your tool trolleys and workbenches with 1/6, 1/3, 2/3 or 3/3 foam inlays.

Tool Control System
The intelligent modular inlay system protects and organises the tools in tool boxes, tool trolleys and workbenches. Two-colour foam inlays make checking the completeness of the tools quick and easy.

Technical drawing.

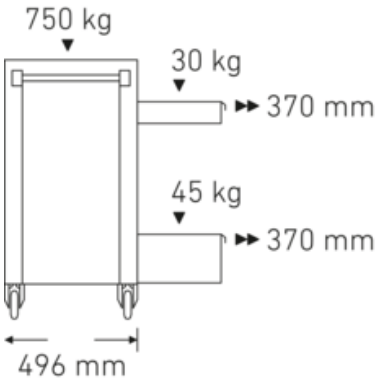

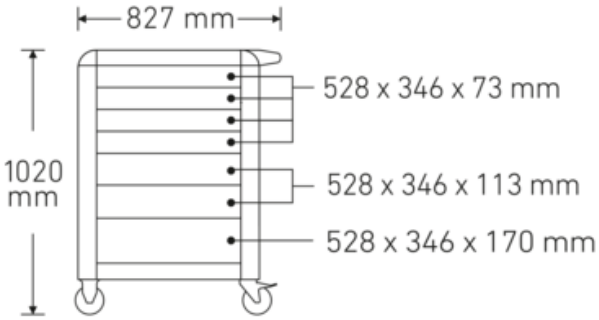

Technical attributes.

Model No.	95/7 A PRO
Verschlussart	Zentralverriegelung
Length mm (L)	496 mm
Width mm (b)	827 mm
Height mm (h)	1020 mm
Number of drawers	7
Load capacity	750 kg
Internal drawer dimensions mm	346 x 528 x 73 mm (4x) 346 x 528 x 113 mm (2x) 346 x 528 x 170 mm (1x)
Drawer load capacity	30 kg 30 kg 45 kg
Colour	anthracite, RAL 7016; black, RAL 9005
Colour abbreviation	RAL 7016; RAL 9005

Logistics data.

Product no.	81200163
GTIN	4018754334667
Weight (g)	71500 g
Volume (packaged, dm3)	461.28808 dm3
Packing standard	1
WEEE/ElektroG	nicht ear-pflichtig
Customs tariff no.	94032080
Country of origin AWR	CHINA
Region of origin	Ausländischer Ursprung
Depth mm (IFS)	720
Width mm (IFS)	496
Height mm (IFS)	863
Weight (gross, kg)	79,000
Weight PAP (kg)	7,500
Weight PVC (kg)	0,000
Length (packaged, mm)	836
Width (packaged, mm)	587
Height (packaging, mm)	940

GTIN.

4 018754 334667

Accessories (for).

90432727
Spray can holder

80320060
Twin hook

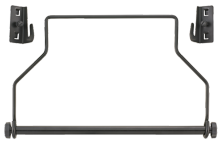

81483004
Paper roll holder

80340040
Twin hook

89010040
Cable holder

80340050
Twin hook

83812070
Empty tray for small components

80350017
Rectangular lug

80350020
Rectangular lug

81484001
Drawer divider

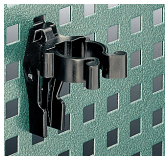

80360012
Spring clip

81484002
Drawer divider

89010041
Laptop holder

89010003
Anti-slip mat GRIPMAT

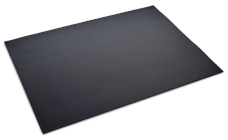

90432806
Rubber mat

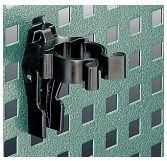

80360018
Spring clip

81485006
Spring clip

80360024
Spring clip

81485012
Spring clip

80380030
Container

80310030
Single hook

80310060
Single hook

80320030
Twin hook

89011053
Waste bin

89010042
Laptop holder adaptor

90432802
Protective cover

80310090
Single hook

Spare part(s), spare part(s) for.

90432718
Lock, mechanical

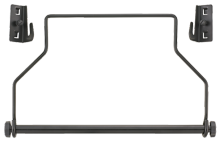

81483004
Paper roll holder

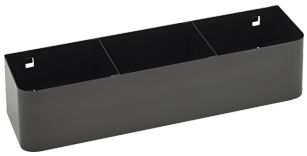

90432719
Spray can holder

89480003
Wheel set

81490001
Wheel set

81490002

Images.

STAHLWILLE Eduard Wille GmbH
Lindenallee 27 · 42349 Wuppertal · Germany · Phone: +49 202 4791-0
info@stahlwille.de · www.stahlwille.com
© STAHLWILLE Eduard Wille GmbH, Wuppertal