OPERATOR MANUAL

EVOTORQUE® BATTERY TOOL COMPACT (EBT-C)

NORBAR TORQUE TOOLS LTD

Wildmere Road, Banbury
Oxfordshire, OX16 3JU

UNITED KINGDOM

Tel + 44 (0)1295 270333

Email: enquiry@norbar.com

To access latest versions of all Norbar Operator Manuals, scan the QR code below.

To find your nearest Norbar company or authorised distributor, scan the QR code below.

www.norbar.com

Part Number 34520 | Issue 3 | Original Instructions (English) | © Norbar Torque Tools Ltd 2025

READ OPERATOR MANUALS

Part Number	Description	Model	Image	Operator Manual
181473 181477	EvoTorque® Battery Tool Compact	EBT-C-750 EBT-C-1100		34520 (EN)
60334.EBT	EvoTorque® Battery Pack	EBP Series		34466 (EN)
60352.KIT	EvoTorque® Battery Charger	EBC Series		34515 (EN)

Available Languages

Code	Language	Document Type	Definition
DA	Dansk / Danish	Operatør manual	Oversættelse af originale instruktioner
DE	Deutsch / German	Bedienungsanleitung	Übersetzung der Originalanleitung
EN	English	Operator Manual	Original Instructions
ES	Español / Spanish	Manual del operando	Traducción de las instrucciones originales
FI	Suomi / Finnish	Operaattori manuaali	Käännös a lkuperäisistä ohjeista
FR	Français / French	Manuel d'opérateur	Traduction des instructions originales
IT	Italiano / Italian	Manuale dell'operatore	Traduzione delle istruzioni originali
NL	Nederlands / Dutch	Operatorhandleiding	Vertaling Van De Originele Instructies
NO	Norsk / Norwegian	Operatør manual	Oversettelse av de originale instruksjonene
PL	Polski / Polish	Podręcznik operator	Tłumaczenie oryginalnej instrukcji
PT	Português / Portuguese	Manual do operador	Tradução das Instruções Originais
SV	Svenska / Swedish	Operatör manual	Översättning av originalinstruktioner

34520
+
34466
+
34515

Visit:

norbar.com/Media/Manuals

Disclaimer: Tool operation is not warranted in an EU member state if the Operator Manual is not in that state's language. Contact the tool supplier if a translation is needed.

CONTENTS

Read Operator Manuals **1**
Available Languages 1

Part Numbers Covered by This Manual **3**
Serial Number 3

Safety Messages **4**

Safety – General Power Tool Safety Warnings **4**
Work Area Safety 4
Electrical Safety 4
Personal Safety 5
Power Tool Use and Care 5
Battery Tool Use and Care 6
Service 6

Safety – EBT-C Specific Safety Warning **7**
Markings on Tool 7
EBT-C Tools without Reaction Bar 7

Introduction **8**
Parts Included 8
Accessories 9

Features and Functions **10**

Set Up Instructions **11**
Torque Reaction 11
Battery 14
Display Screens 15
Main Menu 16

Operating Instructions **17**
Tightening 17
Releasing 20

Maintenance **21**
Daily Checks 21
Calibration 21
Gearbox 21
Drive Square 22
Battery Maintenance 22
Software Updating 22
Battery Charger Maintenance 22
Product Disposal 22

Specifications **23**

Declaration of Conformity **25**

Troubleshooting **26**

Glossary of Terms **28**

PART NUMBERS COVERED BY THIS MANUAL

This manual covers the set up and use of Norbar EvoTorque® Battery Tool Compact (EBT-C) series.

Model	Torque		Part Number
	Calibrated Range	Operating Range	
EBT-C-750	150 - 750 N·m	75 - 750 N·m	181473
EBT-C-1100	220 - 1,100 N·m	110 - 1,100 N·m	181477

IMPORTANT: ALL EBT-C TOOLS ARE SUPPLIED WITH 1 REACTION BAR, 2 BATTERIES, 1 CHARGER AND PACKED IN A CARRY CASE

NOTE: The main tool models are listed above; other tools with minor variances are also covered.

Serial Number

Serial number format: **YYYYAXXXXX**

Serial Number	Description	Options		
YYYY******	Year of Manufacture			
****A******	Month of Manufacture	A = January D = April G = July K = October	B = February E = May H = August L = November	C= March F = June J = September M = December
*****XXXXX	Serial Number			

NOTE: Due to the manufacturing process, the calibration date may be after the month of manufacture.

SAFETY MESSAGES

The safety messages are provided to cover reasonable situations that may be encountered when operating, servicing or repairing cordless tools. It is the responsibility of operators and servicing technicians to be knowledgeable about the procedures, tools and materials used and to satisfy themselves that the procedures, tools and materials will not compromise their safety, that of others in the work place or the tool.

Use only with Norbar EvoTorque® Battery Pack (EBP Series) batteries.
Read EvoTorque® Battery Pack (EBP Series) Operator Manual 34466.

Charge only with Norbar EvoTorque® Battery Charger (CTC / EBC Series) equipment.
Read EvoTorque® Battery Charger (60352.KIT) Operator Manual 34515.

SAFETY – GENERAL POWER TOOL SAFETY WARNINGS

Symbol	Meaning
	The exclamation mark is intended to alert the user to the presence of important operating and maintenance (servicing) instructions in the manual.

WARNING: READ ALL SAFETY WARNINGS, INSTRUCTIONS, ILLUSTRATIONS AND SPECIFICATIONS PROVIDED WITH THIS POWER TOOL. FAILURE TO FOLLOW ALL INSTRUCTIONS LISTED BELOW MAY RESULT IN ELECTRIC SHOCK, FIRE AND / OR SERIOUS INJURY.

Save all warnings and instructions for future reference. *The term 'power tool' in the warnings refers to your mains-operated (corded) power tool or battery-operated (cordless) power tool.*

Work Area Safety

- **Keep work area clean and well lit**. *Cluttered or dark areas invite accidents*
- **Do not operate power tools in explosive atmospheres, such as in the presence of flammable liquids, gases or dust.** *Power tools create sparks which may ignite the dust or fumes*
- **Keep children and bystanders away while operating a power tool.** *Distractions can cause you to lose control.*

Electrical Safety

- **Power tool plugs must match the outlet. Never modify the plug in any way. Do not use any adapter plugs with earthed (grounded) power tools.** *Unmodified plugs and matching outlets will reduce risk of electric shock*
- **Avoid body contact with earthed or grounded surfaces, such as pipes, radiators, cooking stoves and refrigerators.** *There is an increased risk of electric shock if your body is earthed or grounded*
- **Do not expose power tools to rain or wet conditions.** *Water entering a power tool will increase the risk of electric shock*
- **Do not abuse the cord. Never use the cord for carrying, pulling or unplugging the power tool. Keep cord away from heat, oil, sharp edges or moving parts.** *Damaged or entangled cords increase the risk of electric shock*

- **When operating a power tool outdoors, use an extension cord suitable for outdoor use.** *Use of a cord suitable for outdoor use reduces the risk of electric shock*

- **If operating a power tool in a damp location is unavoidable, use a residual Ground Fault Circuit Interrupter (GFCI) protected supply.** *Use of a GFCI reduces the risk of electric shock*

  AUSTRALIA / NEW ZEALAND:
  If operating a power tool in a damp location is unavoidable, use a Residual Current Device (RCD) protected supply. *Use of an RCD reduces the risk of electric shock.*

Personal Safety

- **Stay alert, watch what you are doing and use common sense when operating a power tool. Do not use a power tool while you are tired or under the influence of drugs, alcohol or medication.** *A moment of inattention while operating power tools may result in serious personal injury*

- **Use personal protective equipment (PPE). Always wear eye protection.** *Protective equipment such as a dust mask, non-skid safety shoes, hard hat or hearing protection used for appropriate conditions will reduce personal injuries*

- **Prevent unintentional starting. Ensure the switch is in the off-position before connecting to power source and / or battery pack, picking up or carrying the tool.** *Carrying power tools with your finger on the switch or energising power tools that have the switch on invites accidents*

- **Remove any adjusting key or wrench before turning the power tool on.** *A wrench or a key left attached to a rotating part of the power tool may result in personal injury*

- **Do not overreach. Keep a proper footing and balance at all times.** *This enables better control of the power tool in unexpected situations*

- **Dress properly. Do not wear loose clothing or jewellery. Keep your hair and clothing away from moving parts.** *Loose clothes, jewellery or long hair can be caught in moving parts*

- **If devices are provided for the connection of dust extraction and collection facilities, ensure these are connected and properly used.** Use of dust collection can *reduce dust-related hazards*

- **Do not let familiarity gained from frequent use of tools allow you to become complacent and ignore tool safety principles.** *A careless action can cause severe injury within a fraction of a second.*

Power Tool Use and Care

- **Do not force the power tool. Use the correct power tool for your application.** *The correct power tool will do the job better and safer at the rate for which it was designed*

- **Do not use the power tool if the switch does not turn it on and off.** *Any power tool that cannot be controlled with the switch is dangerous and must be repaired*

- **Disconnect the plug from the power source and / or remove the battery pack, if detachable, from the power tool before making any adjustments, changing accessories, or storing power tools.** *Such preventive safety measures reduce the risk of starting the power tool accidentally*

- **Store idle power tools out of the reach of children and do not allow persons unfamiliar with the power tool or these instructions to operate the power tool.** *Power tools are dangerous in the hands of untrained users*

- **Maintain power tools and accessories. Check for misalignment or binding of moving parts, breakage of parts and any other condition that may affect the power tool's operation. If damaged, have the power tool repaired before use.** *Many accidents are caused by poorly maintained power tools*

- **Keep cutting tools sharp and clean.** *Properly maintained cutting tools with sharp cutting edges are less likely to bind and are easier to control*
- **Use the power tool, accessories and tool bits etc. in accordance with these instructions, taking into account the working conditions and the work to be performed.** *Use of the power tool for operations different from those intended could result in a hazardous situation*
- **Keep handles and grasping surfaces dry, clean and free from oil and grease.** *Slippery handles and grasping surfaces do not allow for safe handling and control of the tool in unexpected situations.*

Battery Tool Use and Care

- **Recharge only with the charger specified by the manufacturer.** *A charger that is suitable for one type of battery pack may create a risk of fire when used with another battery pack*
- **Use power tools only with specifically designated battery packs.** *Use of any other battery packs may create a risk of injury or fire*
- **When battery pack is not in use, keep it away from other metal objects, like paper clips, coins, keys, nails, screws or other small metal objects, that can make a connection from one terminal to another.** *Shorting the battery terminals together may cause burns or a fire*
- **Under abusive conditions, liquid may be ejected from the battery; avoid contact. If contact accidentally occurs, flush with water. If liquid contacts eyes, additionally seek medical help.** *Liquid ejected from the battery may cause irritation or burns*
- **Do not use a battery pack or tool that is damaged or modified**. *Damaged or modified batteries may exhibit unpredictable behaviour resulting in fire, EXPLOSION or risk of injury*
- **Do not expose a battery pack or tool to fire or excessive temperature**. *Exposure to fire or temperature above 130°C may cause explosion*
- **Follow all charging instructions and do not charge the battery pack or tool outside the temperature range specified in the instructions.** *Charging improperly or at temperatures outside the specified range may damage the battery and increase the risk of fire.*

Service

- **Contact Norbar or an authorised distributor for servicing.** *Use only identical replacement parts to maintain the safety of the power tool.*
- **Never service damaged battery packs.** *Service of battery packs should only be performed by the manufacturer or authorised service providers.*

SAFETY – EBT-C SPECIFIC SAFETY WARNING

This tool is intended for use with threaded fasteners.

- Always use impact or high-quality sockets
- Use only sockets and adaptors which are in good condition
- Use only sockets and adaptors which are intended for use with power tools
- Always operate with an approved reaction bar. Do not fix reaction bar to reaction point
- Tool supplied with ‘Safe to Start’ feature ON. If set to OFF the output will rotate immediately when the main trigger is pressed
- Do not block cooling air entry and exit points
- For very low torque rate joints (e.g. heat exchangers with long rundown threads) the tool will get warm. In extreme cases, the tool safety temperature control will stop the tool
- Understand the operation of both the TORQUE (TRQ) preset and TORQUE AND ANGLE (TAA) preset, especially when applied to pre-tightened fasteners. Incorrect tool use can easily apply excessive torque
- Do not remove any labels. Replace all damaged labels (contact Norbar)
- Do not lock or tape trigger, or ‘Safe to Start’ button, in the ON position
- If the tool malfunctions, discontinue use and immediately arrange for service and repair
- Do not lubricate or clean tools with flammable or volatile liquids such as kerosene, gasoline, diesel, jet fuel or car brake cleaner
- Ensure tool is shut down before removing battery. HOLD to shut down
- Store tool in carry case after use
- When used for railway applications, the tool may not be used on or adjacent to electrically live conductor rails.

Markings on Tool

Pictograms on Tool	Meaning
	Read and understand Operator Manual
	Unexpected tool movement due to reaction forces or breakage of drive square or reaction bar may cause injuries. There is a risk of crushing between the reaction bar and work piece. Keep hands away from reaction bar. Keep hands away from tool output

EBT-C Tools without a Reaction Bar

Upon customer request some EBT-C tools are supplied without a reaction bar. These tools MUST NOT be used until a suitable reaction bar has been fitted. The reaction bar is defined as ‘interchangeable equipment’ under Machinery Safety regulations. If applicable a new reaction bar will need to comply with these regulations.

INTRODUCTION

The EvoTorque® Battery Tool Compact (EBT-C) series is an electronic torque tool designed for applying torque to threaded fasteners. There are models to cover torque capacities of up to 750 N·m and also up to 1,100 N·m.

Parts Included

Description	Image	Model	
		EBT-C-750	EBT-C-1100
Maximum Torque	–	750 N·m	1,100 N·m
Visual Difference	–		
Cranked Reaction Bar		19860	19861
Drive Square (size)	–	Integrated (3/4")	19431 (1”)
Reaction Bar Retaining Circlip		26588	265417
EBT-C Operator Manual	–	34520	34520
Quick Reference Guide	–	34521	34521
USB Flash Drive with operator manuals	–	61139	61139
Battery (x 2)		60334.EBT	60334.EBT
Charger		60352.KIT	60352.KIT

Accessories

Description	Image	Model	
		EBT-C-750	EBT-C-1100
1” Drive Square (+ Fixing Screw)	–	–	19431 (+ 25352.45)
Blade Reaction		19859	19870
Wheeled Reaction Assembly		19864	19872
6” Bladed Extension		19876.006	–
9” Bladed Extension		19876.009	19879.009
Weld Ring		19871	19784
6” Long Nose Extension ¾” SQ DR		19869	–

Reactions to suit specific applications can be supplied, contact Norbar or an authorised distributor for details.

FEATURES AND FUNCTIONS

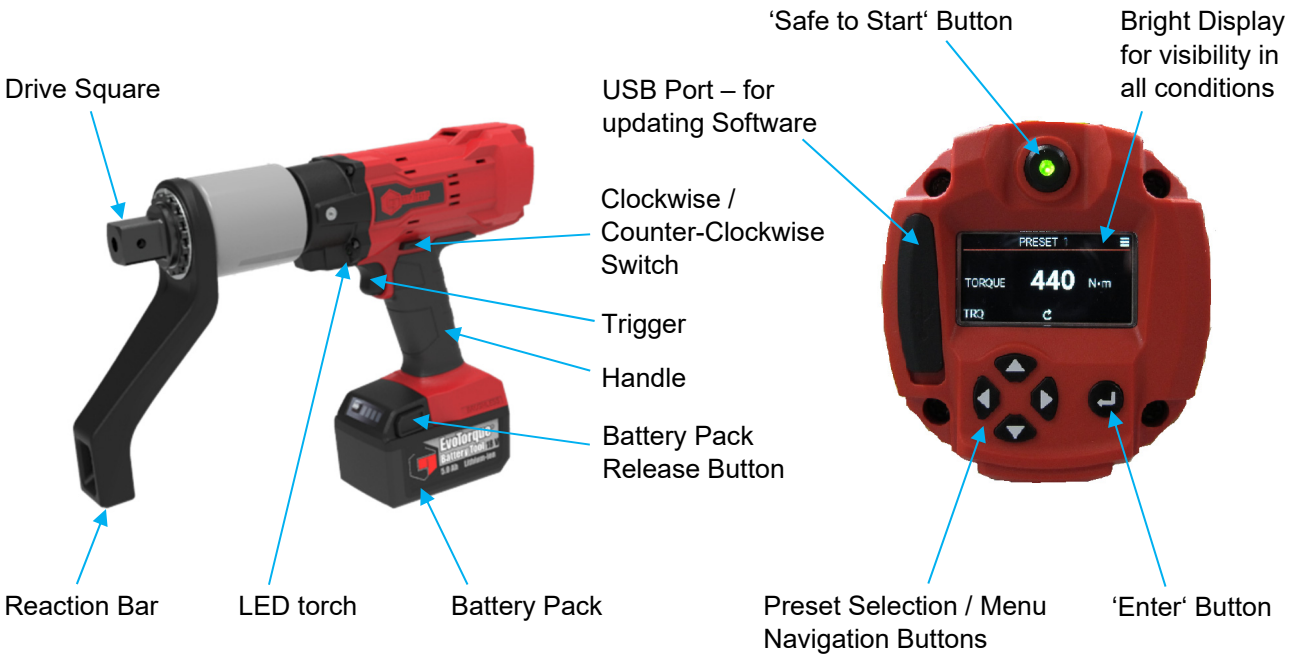

Brushless motor for low maintenance.

Trigger and 'Safe to Start' button to ensure BOTH hands are safely positioned away from the work piece and reaction bar. Only when the reaction bar has seated and torque is applied can the 'Safe to Start' be released.

18 V, 5.0 Ah (Ampere-hour) battery and efficient motor give outstanding fastening performance per charge.

Tool is uninhibited by power cable or hose, improving safety, convenience and versatility.

Clear indication of successful fastener application.

'STATS' show tool statistics, including date, time and number of uses.

Touch trigger for high-powered LED torch to illuminate application.

Preset	Torque (TRQ)	Torque and Angle (TAA)
Display	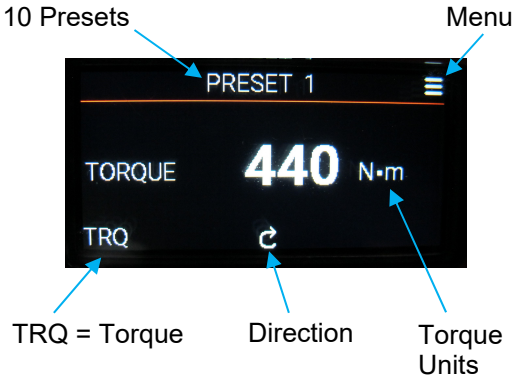	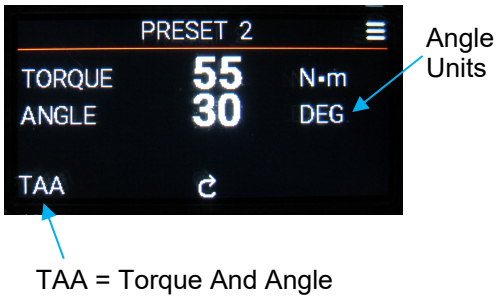

IMPORTANT: WHEN ⚠ APPEARS IN THE DISPLAY IT IS A VISUAL REMINDER THAT A SERVICE IS DUE

SET UP INSTRUCTIONS

NOTE: **If the equipment is used in a manner not specified by the manufacturer, the protection provided by the equipment may be impaired.**

WARNING: **ALLOW THE TOOL TO EQUALISE TO THE AMBIENT TEMPERATURE / HUMIDITY BEFORE SWITCHING ON. WIPE OFF ANY MOISTURE BEFORE USE.**

Please complete the set up in the order shown.

Torque Reaction

The reaction bar ensures all reaction forces are contained, so torque reaction is not passed back to the operator. The reaction bar rotates in the opposite direction to the output drive square. Ensure the reaction is allowed to rest squarely against a solid object or surface adjacent to the fastener to be tightened.

Torque Reaction	
Clockwise	**Counter - Clockwise**

WARNING: **ALWAYS KEEP HANDS CLEAR OF THE REACTION BAR WHEN THE TOOL IS IN USE OR SERIOUS INJURY MAY RESULT.**

1. Select the correct reaction for the application.

Reaction Bar (supplied)	Cranked Reaction Bar 19860	Cranked Reaction Bar 19861
Tool	**750 N·m**	**1,100 N·m**
Dimensions (mm)	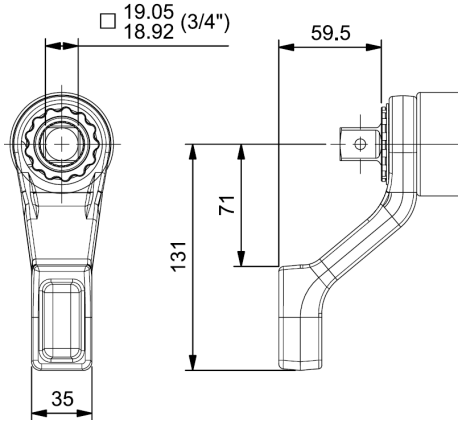	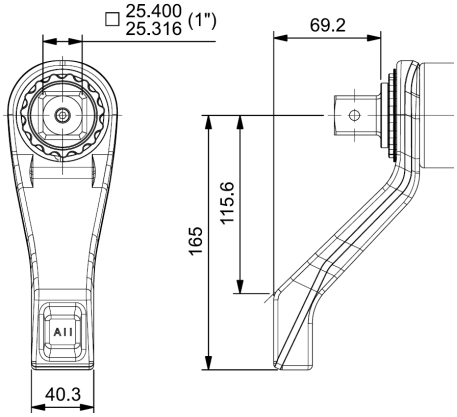

Reaction Bar (accessory)	Bladed Reaction 19859	Bladed Reaction 19870
Tool	750 N·m	1,100 N·m
Dimensions (mm)	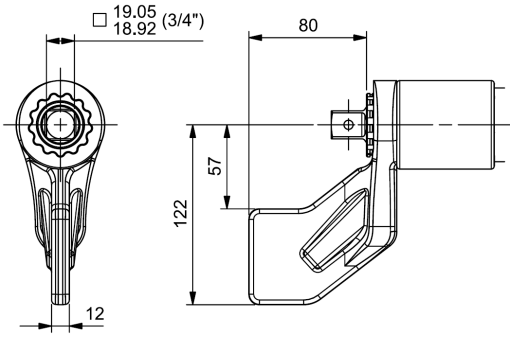	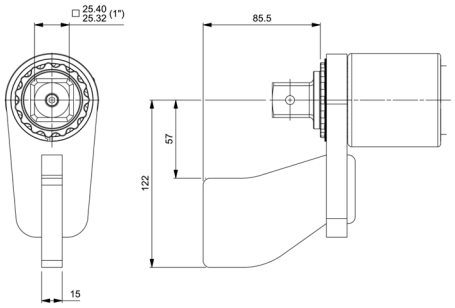

Reaction Bar (accessory)	Wheel Reaction Assembly 19864	Wheel Reaction Assembly 19872
Tool	750 N·m	1,100 N·m
Dimensions (mm)	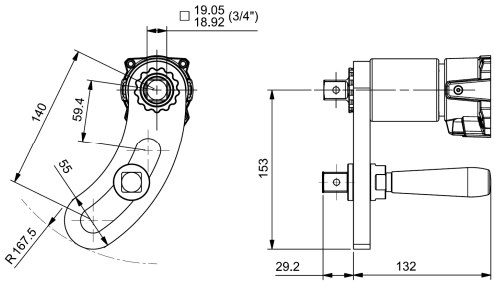	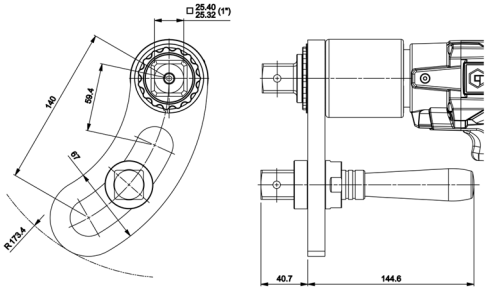

2. Fit reaction bar over the drive square to engage reaction splines. Secure with circlip supplied.

TIP: To remove the circlip a flat screwdriver may be required.

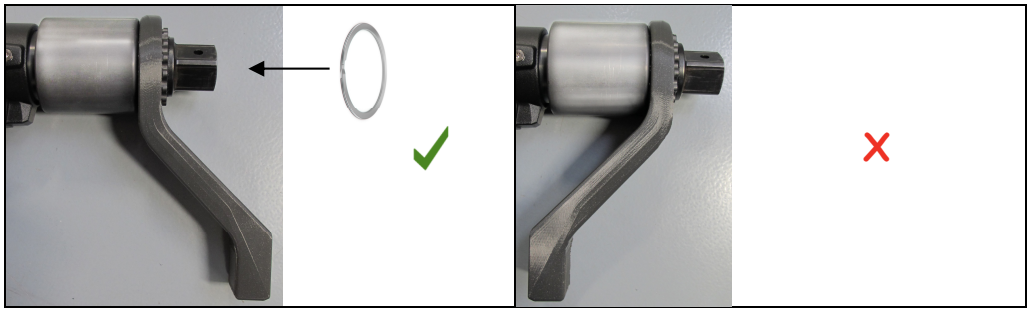

3. Use of standard-length sockets, long sockets and drive square extensions.

Visual	Comment
Standard-Length Socket 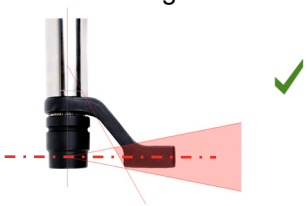	The reaction bar has been designed to give an ideal reaction point when used with a standard-length socket. The ideal reaction arrangement has the centre of the reaction bar and the centre of the nut on a perpendicular line to the centre line of the tool. To allow for a small difference in socket length the reaction bar may contact any point within the shaded area.
Long Socket	If a long socket is used it may move the reaction bar outside the safe reaction window. **WARNING: IF THE REACTION POINT IS OUTSIDE THE SHADED AREA EXCESSIVE LOADS MAY BE PLACED ON THE TOOL LEADING TO POTENTIAL OPERATOR INJURY AND DAMAGE TO THE TOOL**
Drive Square Extension	DO NOT use long drive square extensions as these will cause serious damage to the tool.

4. The reaction point.

It is essential the reaction bar rests squarely against a solid object or surface adjacent to the fastener to be tightened. React towards the end of the reaction bar, circled in green using the maximum area possible. DO NOT react on the surface circled in red.	

WARNING: DO NOT MODIFY THE REACTION BAR. FAILURE OF THE REACTION BAR CAN ENDANGER OPERATOR SAFETY AND DAMAGE THE TOOL.

For alternative reaction bars see ACCESSORIES list.
For custom reaction bars contact Norbar or an authorised distributor.

Battery

1. Only use EvoTorque® Battery Pack (EBP) battery with this tool.

2. To charge battery.

Charge battery in separate EvoTorque® Battery Charger (EBC 60352.KIT).

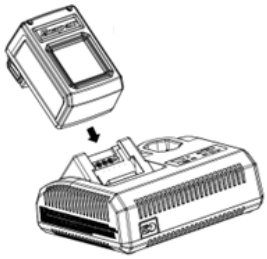

3. To insert and remove battery.

Insert battery into tool handle until latch operates.

To remove battery:

A. HOLD to shut down tool.
B. Press both side latch buttons and slide battery out.

Display Screens:

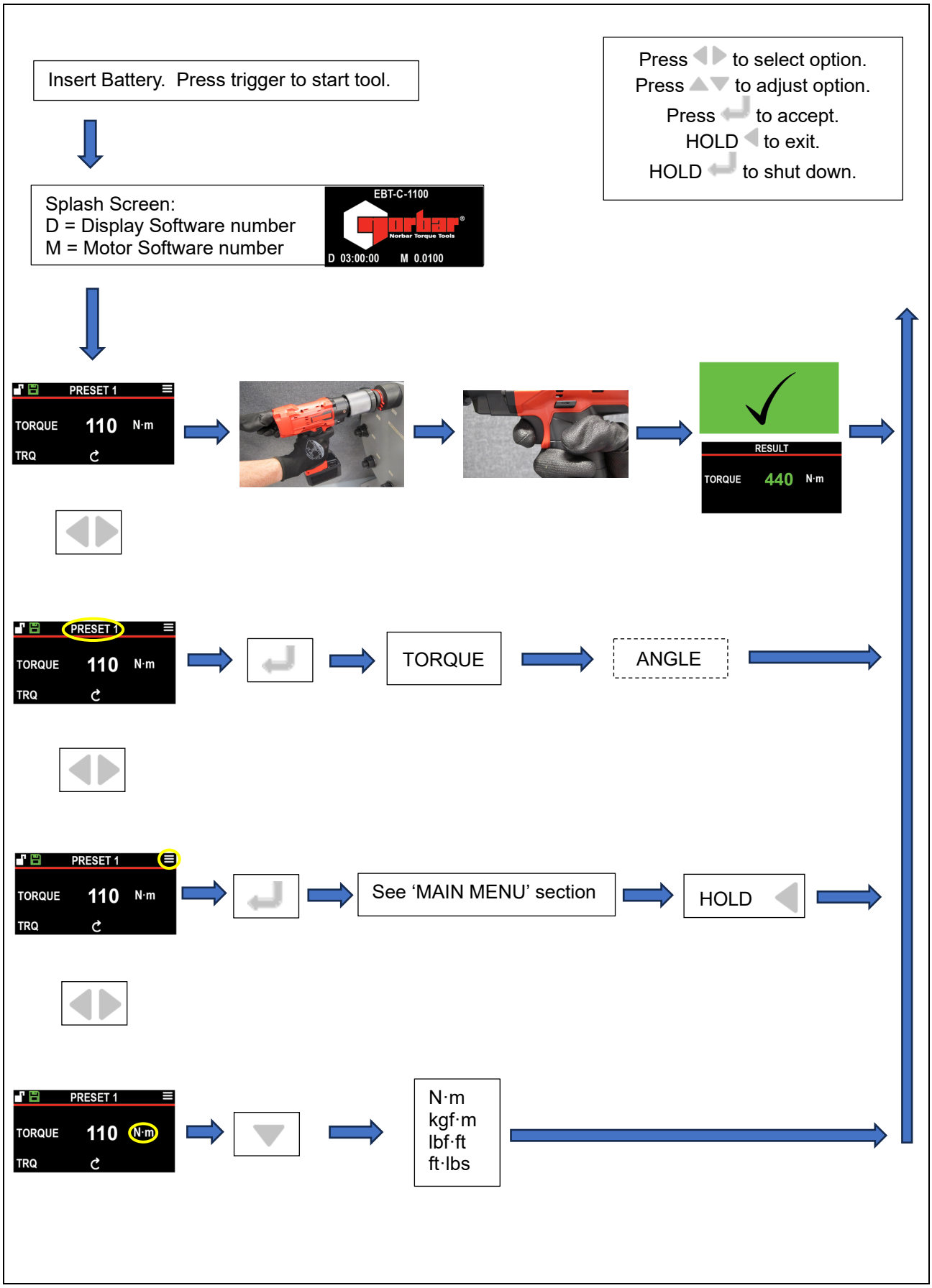

Main Menu

Use ⇧ ⇩ select. Use ⇧ ⇩ ⇦ ⇨ to adjust. Hold ⇦ to exit. Use ⏎ to Enter.

Main Menu	Action
PRESET	Use ⇧ ⇩ to select PRESET (PRESET 1, PRESET 2 PRESET 3, ….. 10). Use ⇦ ⇨ for PRESET page: XX-0 MODE, TORQUE, ANGLE & TORQUE. XX-1 COUNT, TORQUE +/-%, ANGLE+/- & DIRECTION. XX-2 MIN TORQUE, MAX TORQUE, MIN ANGLE & MAX ANGLE. Press ⏎ for **PRESET MENU:** **EDIT PRESET** **USE PRESET** **DELETE PRESET** **DELETE ALL PRESETS** <u>Each PRESET contains (* = TORQUE AND ANGLE only):</u> **MODE**:TORQUE / TORQUE AND ANGLE **DIRECTION:** CW (Clockwise) / CCW (Counter-Clockwise) / BOTH **TORQUE UNITS:** N·m / ft·lbs / lbf·ft / kgf·m **TORQUE:** 10% capacity (10 - 100% capacity) [*5% capacity (5% - 100% capacity)] **TORQUE TOLERANCE:** 05% (05 to 20) ***ANGLE UNITS:** (DEG / TURN) – Degrees or Turn ***ANGLE:** 3 DEG (3 - 999) or 3 TURN (0.01 - 999.00) ***ANGLE TOLERANCE:** 02 DEG (02 to 20) **PRESET XX/0:** (confirmation screen. MODE / TORQUE / ANGLE / TORQUE) **EXIT:** (SAVE / DISCARD)
SHUT DOWN	**Press** ⏎
ZERO	**TORQUE ZERO:** To zero torque transducer. Hold ⇦ to exit.
STATS	**SHOW STATS & FAULTS** Date, time & number of uses in 4 torque ranges. DD/MM/YY. HH:MM:SS. 0 - 49%. 50 - 89%. 80 - 109%. 110 - 109%. Press ⏎ for: **FAULTS 0** Press ⇧ ⇩ to view. ⏎ to exit. **CLR STATS & FAULTS** – Delete number of uses. Hold ⇦ to exit
INFO	Press ⇧ ⇩ to view. INFO 00: DISP VER (display), MCU VER (motor), SERIAL, MODEL, BRAND. INFO 01: CAP (capacity), GEARBOX, VR (velocity ratio), COMMS, TYPE (S/A). INFO 02: TESTED, CAL DATE.
HELP	Web site link
SETTINGS	**SETTINGS MENU** Use ⇧ ⇩ and ⏎ to select. Use ⇧ ⇩ ⇦ ⇨ to adjust. Use ⏎ to enter. **LCD BRIGHTNESS:** 31 (01 [dim] – 31 [bright]). **LANGUAGE:** ENGLISH. **SHUT DOWN TIME:** 30 sec (20 - 1800). **SPLASH TIME:** 5 sec (1 - 5). – = OFF. **TORCH TIME:** 10 sec (05 to 60). - - = OFF **PASS / FAIL TIME:** 1 sec (1 - 10). - - = OFF. **RESULT TIME:** 03 sec (01 - 10). - - = OFF. ****CAL INTERVAL:** 12 months (1 - 24). ****SAFE TO START:** Default ON ('Safe to Start' must be pressed). Only set to OFF after the responsible person has completing a risk assessment for the specific application. ****SET PASSWORD:** Set password to protect features marked **. Set 000000 to disable.
CALIBRATION	Not for user
FACTORY	Not for user
CLOCK	SET YEAR, SET MONTH, SET DAY, SET HOUR, SET MINUTE, SET SECOND

OPERATING INSTRUCTIONS

WARNING: KEEP HANDS CLEAR OF THE REACTION BAR.

WARNING: WHEN USING THIS TOOL IT MUST BE SUPPORTED AT ALL TIMES IN ORDER TO PREVENT UNEXPECTED RELEASE IN THE EVENT OF FASTENER OR COMPONENT FAILURE.

Tightening

1. Fit the tool with required impact or high-quality socket.

Slide the socket over the tool square drive ensuring the pin hole in both socket and square drive line up. Insert holding pin through the hole and place the retaining ring over the holding pin to secure.

2. Set Clockwise / Counter-Clockwise Switch.

Preset Menu	Clockwise Switch	Counter - Clockwise Switch
DIRECTION		
CW (Clockwise)	Preset Torque	100% Torque
CCW (Counter-Clockwise)	100% Torque	Preset Torque
BOTH	Preset Torque	Preset Torque

3. Ensure TORQUE or TORQUE AND ANGLE preset is correct.

TORQUE (TRQ)
Torque is applied until the preset torque is reached.

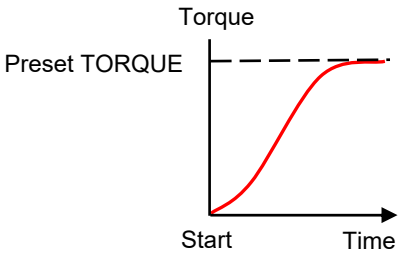

TORQUE AND ANGLE (TAA)
The tool applies the preset torque followed by the preset angle. END TRQ is the end torque value.

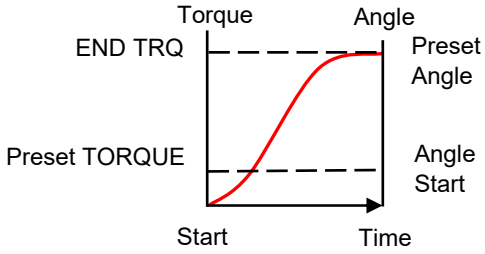

4. Rotate the tool handle into a convenient position relative to the reaction bar.

Fit the tool onto the fastener to be tightened with the reaction bar adjacent to the reaction point.

5. Adopt a posture to counteract normal or unexpected movement of the tool due to reaction forces.

6. Run the tool.

Press trigger and ‘Safe to Start’ button within 1 second to slowly bring reaction bar into contact with the reaction point.
Once the reaction is seated the ‘Safe to Start’ button can be released.
NOTE: Bringing into contact at speed can lead to increased operator danger, fastener damage, reaction point damage and torque inaccuracies especially on high torque rate joints.

7. Fully press trigger until tool stops, then release trigger.

Step	Example of Tightening Process			
	TORQUE (TRQ)		TORQUE THEN ANGLE (TTA)	
Before Trigger press	PRESET 1 TORQUE 440 N·m TRQ		PRESET 1 TORQUE 55 N·m ANGLE 17 DEG TTA	
Tool free runs	TORQUE 0 N·m		TORQUE 0 N·m ANGLE 0 DEG END TRQ 0 N·m	
TRQ / TAA applied	TORQUE 268 N·m		TORQUE 55 N·m ANGLE 17 DEG END TRQ 220 N·m	
FAIL / PASS	FAIL	PASS	FAIL	PASS
Fastener complete	✗	✓	✗	✓
Result (red or green)	RESULT TORQUE 243 N·m	RESULT TORQUE 440 N·m	RESULT TORQUE 55 N·m ANGLE 8 DEG END TRQ 124 N·m	RESULT TORQUE 55 N·m ANGLE 30 DEG END TRQ 366 N·m

8. Remove the tool from the fastener.

TIP: When tightening multiple fasteners on a flange it is recommended to mark each fastener when tight.

This is even more important when using the TORQUE AND ANGLE (TAA) preset as applying additional angle to a tightened fastener will increase the risk of operator danger, fastener damage and flange damage.

Releasing

1. Fit the tool with required impact or high-quality socket.

Slide the socket over the tool square drive ensuring the pin hole in both socket and square drive line up. Insert holding pin through the hole and place the retaining ring over the holding pin to secure.

2. Press Clockwise / Counter-Clockwise Switch to reverse.

Preset Menu	Clockwise Switch	Counter - Clockwise Switch
DIRECTION		
CW (Clockwise)	↻ Preset Torque	← 100% Torque (FULL-R)
CCW (Counter-Clockwise)	→ 100% Torque (FULL-R)	↺ Preset Torque
BOTH	↻ Preset Torque	↺ Preset Torque

3. Rotate the handle into a convenient position relative to the reaction bar.

Fit the tool onto the fastener to be released with the reaction bar adjacent to the reaction point.

4. Adopt a posture to counteract normal or unexpected movement of the tool due to reaction forces.

5. Press trigger and ‘Safe to Start’ button to slowly bring the reaction bar into contact with the reaction point.

6. Keep trigger and ‘Safe to Start’ button pressed until the threaded fastener releases. Release trigger.

TIP: If unable to release the fastener, increase the torque. The tool will automatically limit itself to the maximum output torque.

MAINTENANCE

For optimum performance and safety, regular tool maintenance is required. The user maintenance is limited to that stipulated in this section. Any other maintenance or repairs should be carried out by Norbar or an authorised distributor. After any repair not covered in this section a recalibration must be completed.

WARNING: THE TOOL FEATURES A LITHIUM BATTERY.
ALL LITHIUM BATTERIES ARE SUBJECT TO TRANSPORT LIMITATIONS WITH STRICT PACKAGING AND LABELLING CONDITIONS.

IT IS EASIER TO RETURN A TOOL WITHOUT THE LITHIUM BATTERY. ASK NORBAR OR AN AUTHORISED DISTRIBUTOR.

Maintenance intervals will depend on the tool usage and the environment in which it is being used. The maximum recommended maintenance and recalibration interval is 12 months.

TIP: Steps the user can take to reduce the amount of maintenance required include:

1. **Use the tool in a clean environment**
2. **Maintain the correct torque reaction**
3. **Carry out daily checks**

The tool has no user-serviceable parts inside.

WARNING: REMOVE THE BATTERY PACK FROM THE TOOL BEFORE INVESTIGATING ANY FAULT. SHORT-CIRCUITING THE BATTERY PACK CAN CAUSE FIRE OR PERSONAL INJURY.

Daily Checks

- It is recommended to check the overall condition of the tool, battery and charger every day
- Check for damaged parts and repair before use
- Free run tool to ensure motor and gearbox are smooth and quiet
- Run tool to ensure controls are operational
- Check charger power cord for damage – replace if faulty
- Ensure charger electrical PAT test (Portable appliance testing) is within date
- Maintain tools. Keep tools dry, clean and free of oil and grease - DO NOT use abrasives or solvent-based cleaners
- Ensure ventilation slots are clean and dust free. If cleaned with compressed air, wear eye protection.

Calibration

The tool was supplied with a certificate of calibration. To maintain the specified accuracy, it is recommended that the tool is recalibrated at least once per year.

Recalibration should be carried out by Norbar or an authorised distributor with the facilities and traceability to perform a calibration.
Do not remove tool casing; there are no calibration settings inside.

Gearbox

Under normal operating conditions it is not necessary to re-grease the gearbox. The gearbox contains Lubcon Turmogrease Li 802 EP.

Drive Square

The output drive square can be replaced (1,100 N·m tool only). For part numbers see ACCESSORIES listed in the INTRODUCTION. The drive square is NOT covered by the standard product warranty.

To replace the drive square:

1. Remove battery.
2. Support tool in a horizontal position
3. Use 4 mm hexagonal key to remove the screw and then remove drive square. If the square has sheared it may be necessary to use pliers to remove the broken parts.
4. Fit new drive square.
5. Fit new screw (25352.45) and tighten to 8.5 N·m (6.3 lbf·ft).

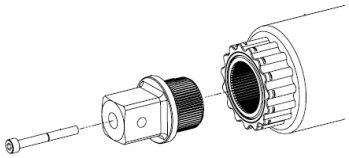

Battery Maintenance

18 V main battery.
Refer to EBP Operator Manual (Part 34466).
If the battery does not hold charge it should be replaced. Dispose of old battery correctly.

3 V clock battery replacement.
TIP: To reduce risk of product damage, use an ESD (electrostatic discharge) safe workstation.

Required tools: Torx screwdriver size T20 and Pozidriv screwdriver size PZ1.

1. Remove 18 V Battery	2. Remove Rear Panel (4 x T20 Screws)	3. Remove Clamp (2 x PZ1 Screws)	4. Push Spring to remove Battery	5. Fit 3 V CR1220 Battery
		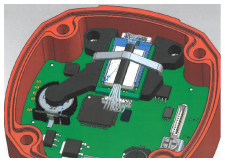	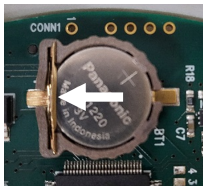 Note battery polarity position	Tighten Screws: PZ1 to 0.3 N·m (0.22 lbf·ft). T20 to 1.8 N·m (1.33 lbf·ft).

Dispose of old battery correctly.

Software Updating

The tool contains software that can be updated through a PC internet connection and via the USB Port.

For the latest version of the EBT-C software, please contact Norbar or visit the 'downloads section' of the Norbar website: norbar.com/Support/Downloads/Software-Download

Battery Charger Maintenance

Refer to EBC 60352.KIT Operator Manual (Part 34515).

Product Disposal

This symbol on the product indicates that it must not be disposed of in the general waste.

Please dispose of according to your local recycling laws and regulations.

Contact Norbar or an authorised distributor for further recycling information.

SPECIFICATIONS

NOTE: Due to continuous improvement, all specifications are subject to change without prior notice.

Symbol	Meaning	Symbol	Meaning
	REFER TO OPERATOR MANUAL		C-Tick (Australia)
	CE MARK	V	VOLT
	CANADIAN - UNITED STATES UNDERWRITERS LABORATORY		DIRECT CURRENT
	UKCA (UK CONFORMITY ASSESSED) MARKING		DO NOT PLACE IN GENERAL WASTE

Mode	Torque (TRQ)	Torque and Angle (TAA)
Torque units	N·m (newton metre) ft·lb (foot pound) lbf·ft (pound-force foot) kgf·m (kilogram-force metre)	
Torque tolerance setting	+/- 5% (5% to 20%)	
Torque operating range	10% - 100% capacity EBT-C-750 = 75 N·m - 750 N·m EBT-C-1100 = 110 N·m - 1,100 N·m	Torque 5% - 100% capacity EBT-C-750 = 37 N·m - 750 N·m EBT-C-1100 = 55 N·m - 1,100 N·m
Torque calibrated range	20% - 100% capacity EBT-C-750 = 150 N·m - 750 N·m EBT-C-1100 = 220 N·m - 1,100 N·m	
Angle units	–	DEG (Degrees) / TURN
Angle tolerance setting	–	+/-2° (2° to 20°)
Angle setting		3° (3 - 999°) / 1 TURN (1.00 - 999.00)
Maximum free running speed	EBT-C-750 = 12.5 rpm EBT-C-1100 = 9.1 rpm	–

Vibration emission: The vibration total value does not exceed 2.5 m/s²
Measured tool vibration (ah) = 0.71 m/s² with uncertainty K = 0.10 m/s²

Noise emission: Sound Pressure Level, L_{pA} = 76.4 dB(A) with uncertainty K = 0.53 dB

The declared vibration and noise emission values have been measured in accordance with a standard test method and may be used for comparing one tool with another.

The declared vibration and noise emission values may also be used in a preliminary assessment of exposure.

WARNING: THE VIBRATION AND NOISE EMISSIONS DURING ACTUAL USE OF THE POWER TOOL CAN DIFFER FROM THE DECLARED VALUES DEPENDING ON THE WAYS IN WHICH THE TOOL IS USED ESPECIALLY WHAT KIND OF WORKPIECE IS PROCESSED.

WARNING: IDENTIFY SAFETY MEASURES TO PROTECT THE OPERATOR THAT ARE BASED ON AN ESTIMATION IN THE ACTUAL CONDITIONS OF USE (TAKING ACCOUNT OF ALL PARTS OF THE OPERATING CYCLE SUCH AS THE TIMES WHEN THE TOOL IS SWITCHED OFF AND WHEN IT IS RUNNING IDLE IN ADDITION TO THE TRIGGER TIME).

SPECIFICATIONS (continued)

Display:	Colour TFT (152 x 320 pixels)
Motor Voltage:	18.0 VDC
Ingress protection	IP 20
Environment:	Industrial. Store in a clean and dry environment
Temperature Range:	Operating & storage = -20ºC to +49ºC (-4ºF to 120ºF)
Operating Humidity:	85% Relative Humidity @ 30ºC (86ºF) maximum

Model	Tool Weight [No Battery or Reaction] (kg)	Battery Weight (kg)	Reaction Weight (kg)
EBT-C-750	3.1	0.8	0.8
EBT-C-1100	3.8	0.8	1.4

Tool Dimensions (mm)

EBT-C-750

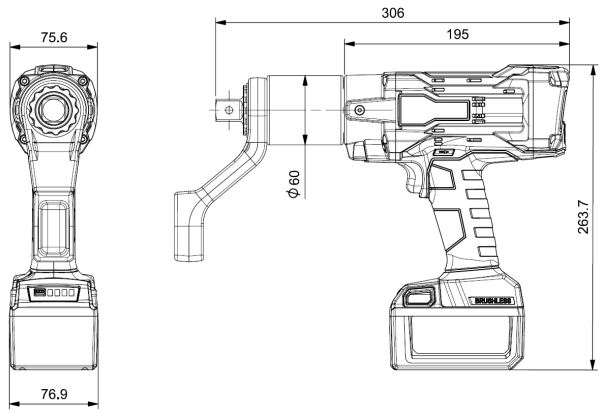

EBT-C-1100

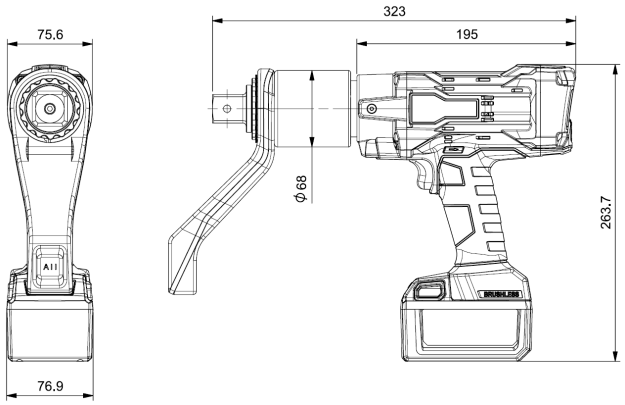

EU Declaration of Conformity (No 0049.0)

This declaration of conformity is issued under the sole responsibility of the manufacturer.

The object of the declaration:

EvoTorque® Battery Tool - Compact

Model names EBT-C-750, EBT-CA-750, EBT-CA-750-BLE,
EBT-C-1100, EBT-CA-1100 & EBT-CA-1100-BLE

Serial Number – All

The object of the declaration described above is in conformity with the relevant union harmonisation legislation:

Directive 2006/42/EC on Machinery
Directive 2014/30/EU on Electromagnetic Compatibility
Directive 2011/65/EU of the European Parliament and of the Council of 8 June 2011 on the restriction of the use of certain hazardous substances in electrical and electronic equipment (RoHS)
Directive 2014/53/EU on Radio Equipment (For BLE models only)

The object of the declaration described above has been designed to comply with the following standards:

EN 62841-1:2015+A11:2022 & EN 62841-2-2:2014
EN IEC 55014-1:2021 & EN IEC 55014-2:2021
EN IEC 63000:2018
EN 300 328 V2.2.2 (For BLE models only)

The basis on which conformity is being declared:

The technical documentation required to demonstrate that the products meet the requirements of the above Directives has been compiled by the signatory below and is available for inspection by the relevant enforcement authorities.

The CE mark was first applied in: 2024.

The authorised representative within the European Union (EU) is:

Francesco Frezza, Snap-on Equipment, Via Prov. Carpi 33, 42015 Correggio, RE, Italy

Signed for and on behalf of Norbar Torque Tools Ltd.

Signed: T. M. Lester **Full Name:** Trevor Mark Lester B.Eng.
Date: 18 July 2024 **Authority:** Compliance Engineer
Place: Norbar Torque Tools Ltd., Wildmere Road, Banbury, Oxfordshire, OX16 3JU, UK

UK Declaration of Conformity (No 0049.0)

This declaration of conformity is issued under the sole responsibility of the manufacturer.

The object of the declaration:

EvoTorque® Battery Tool - Compact

Model names EBT-C-750, EBT-CA-750, EBT-CA-750-BLE,
EBT-C-1100, EBT-CA-1100 & EBT-CA-1100-BLE

Serial Number – All

The object of the declaration described above is in conformity with the relevant UK statutory requirements:

Supply of Machinery (Safety) Regulations 2008
Electromagnetic Compatibility Regulations 2016
The Restriction of the Use of Certain Hazardous Substances in Electrical and Electronic Equipment Regulations 2012
Radio Equipment Regulations 2017 (For BLE models only)

The object of the declaration described above has been designed to comply with the following standards:

BS EN 62841-1:2015+A11:2022 & BS EN 62841-2-2:2014
BS EN IEC 55014-1:2021 & BS EN IEC 55014-2:2021
BS EN IEC 63000:2018
EN 300 328 V2.2.2 (For BLE models only)

The basis on which conformity is being declared:

The technical documentation required to demonstrate that the products meet the requirements of the above legislation has been compiled by the signatory below and is available for inspection by the relevant enforcement authorities.

The UKCA mark was first applied in: 2024.

Signed for and on behalf of Norbar Torque Tools Ltd.

Signed: T. M. Lester **Full Name:** Trevor Mark Lester B.Eng.
Date: 18 July 2024 **Authority:** Compliance Engineer
Place: Norbar Torque Tools Ltd., Wildmere Road, Banbury, Oxfordshire. OX16 3JU

TROUBLESHOOTING

The following is only a guide, for more complex fault diagnoses please contact Norbar or an authorised distributor.

Error Code	Likely Reason	Likely Solutions
1. 18 V BATTERY LOW	Under voltage protection	Charge battery
2. MCU TOO COLD	MCU under temperature	Warm up tool
3. MCU TOO HOT	MCU over temperature	Cool down tool
4. MOSFET TOO COLD	MOSFET under temperature	Warm up tool
5. MOSFET TOO HOT	MOSFET over temperature	Cool down tool
6. MOTOR TOO COLD	Motor under temperature	Warm up tool
7. MOTOR TOO HOT	Motor over temperature	Cool down tool
8. 18 V START COMMS	Battery handshake error	Battery fault
13. 18 V OVER VOLTAGE	Over voltage protection	Battery fault
14. 18 V CONNECTION	Battery power disconnected	Battery fault
40. OVERTORQUE	Torque above tool capacity. For Torque and Angle (TAA) the angle cannot be achieved	Use larger tool
41. TRIG RELEASE	User released trigger early	Keep trigger pressed until preset achieved
42. SAFE TO START	Need to press ‘Safe to Start’ and triggers within 1 s	Depress ‘Safe to Start’ before main trigger
43. RESULTS FULL	Tool memory full	Clear memory
44. 18 V BATTERY LOW	Main battery is low	Charge main battery
45. CLOCK BATTERY LOW	3 V clock battery is low	Change 3 V clock battery, see Maintenance section
48. FAULTS CLEARED	Faults cleared	Normal operation
49. CAL NEEDED	Tool is beyond Calibration date	Calibrate tool
52. CLOCK NOT SET	i. Clock was not set ii. 3 V clock battery low	i. Set clock ii. Change 3 V clock battery
53. TRQ BELOW TARGET	Torque result below the target	Tool not in control
57. ALREADY TIGHT	i. Torque achieved with only small bolt movement ii. Bolt already tight iii. Bolt torque too high for TAA joint	i. Ensure bolt moves at least 15° so tool can control tightening ii. Undoing bolt and re-tighten iii. Ensure bolt torque is less before using tool in TAA mode
Fault not shown above	Complex error	Contact Norbar or an authorised distributor

TROUBLESHOOTING (continued)

Problem	Likely Reason	Likely Solutions
No Display	i. Tool is shut down ii. Flat battery	i. Press trigger to power tool ii. Change / charge battery
Tool output drive does not rotate when trigger is pressed	No battery fitted	Fit battery
	Tool in menu screen	Exit menu to home screen
	'Safe to Start' button NOT pressed. Button flashes to remind user	Press trigger + 'Safe to Start' button at the same time (within approximately half a second) to run tool
	Tool is on tight fastener	Remove from fastener Check correct setting of tool direction
	Trigger pressed too early after previous use	Wait for home screen
	Output drive square sheared	See MAINTENANCE section to replace drive square
	Gear train or motor is damaged	Contact Norbar or an authorised distributor
Result shown in Red	i. Bolt has not made correct torque or angle ii. Fastener already tight iii. Tool 'slammed' into fastener	i. Trigger released early. Fastener sheared or thread stripped ii. Undo and re-tighten fastener iii. Reaction bar moving too fast. Undo and re-tighten fastener, bringing reaction bar in slowly
Measured angle is less than tool applied	Flex in reaction bar or reaction point	Ensure reaction bar & reaction point are rigid
Tool runs slower at lower torque setting	Normal operation	Normal operation
Lost password	–	Contact Norbar or an authorised distributor
Tool stops, with 4 flashing LED's on battery	Battery over temperature, 158°F (70°C) detected	Wait for battery to cool
Tool stops, with left battery LED flashing	Battery voltage low	Charge 18 V battery
Battery charger LED flashes yellow	Battery pack is either too hot or too cold	Wait for battery temperature to be between 32°F (0°C) and 113°F (45°C)
Battery charger LED flashes red	Battery pack is faulty	Replace battery
No load torque value not at zero	Large change in ambient temperature	From MAIN MENU select ZERO
Fault not shown above	Unknown	Remove main battery for 1 minute to power cycle the tool. If problem persists contact Norbar or an authorised distributor

GLOSSARY OF TERMS

Word or Term	Meaning
Angle Tolerance	Pass acceptance for angle result
Cal Interval	Settable calibration reminder
CCW	Counter-Clockwise. When set tool has full reverse (FULL-R)
CW	Clockwise. When set tool has full reverse (FULL-R)
DEG	Degrees of angle movement
EBC60352	EvoTorque® Battery Charger (60352)
EBP	EvoTorque® Battery Pack
EBT-C	EvoTorque® Battery Tool – Compact
END TQR	The torque when angle complete for a TORQUE AND ANGLE (TAA) preset
Fastener	Bolt or stud to be tightened
FULL-R	Full Reverse with no torque control. Used if direction set CW or CCW
INFO	Information for the tool
Preset	TORQUE (TRQ) or TORQUE AND ANGLE (TAA) setting
Reaction Bar	Item to counteract applied torque. Different types are available
Result Time	Time result is shown on screen
Safe to Start	Feature to ensure both hands are located on the tool until the reaction is seated
Shut Down Time	Time after use that tool shuts down
Splash Time	Time initial splash screen is shown
STATS	Statistics for the tool
TAA	Torque and Angle
Torch Time	Time torch is on after trigger released
Torque Rate	The increase in torque with angular displacement while advancing a fastener in a threaded joint (as defined in ISO 5393 Rotary Tools for Threaded Fasteners – Performance Test Method). A LOW torque rate is often referred to as a SOFT joint. A HIGH torque rate is often referred to as a HARD joint
Torque Tolerance	Pass acceptance for torque result as a % of reading
TRQ	Torque
TURN	Turns of the fastener for angle movement
V	Volt
VDC	Voltage Direct Current